AquaJolt

System Design and Project Plan

Taylor Gammon, Josh Pilgrim, Mary Sameoi, Kendall White

10/12/2011

Table of Contents

Background 2
System Overview 2
Block Diagrams 4
Functional Decomposition of Blocks 7
Organization and Management 11
Work Breakdown Structure (Fall 2011) 12
Work Breakdown Structure (Spring 2012) 13
Fall and Spring Gantt Charts 15
Network Diagrams 16
Appendix A: Requirement Specifications 17
Appendix B: Sample Calculations and Generator Specifications 23

Background

Our world is becoming increasingly mobile. As cellular phones continue to increase in versatility and range, a demand for a reliable source of power in remote locations continues to grow. No group is more interested for decentralized energy than are developing countries. As of 2009, over 1.4 billion people, primarily living in Africa and Asia, have little to no access to electricity[1]. Even if the people of these nations have been able to procure some sort of conventional generator, they soon find themselves forced to rely on fossil fuels if they desire an electricity source. These generators possess a number of inherent flaws that limit their usefulness, such as the cost and weight involved in transporting fuel long distances over potentially difficult terrain. The obvious solution to these issues is to use a generator that is powered by a renewable energy source, such as solar, wind, or hydro power. However, solar and wind power both rely heavily upon weather conditions of a given area in order to produce a usable amount of electricity. Hydro power possesses a unique advantage: if the body of water is chosen judiciously, hydro power can be considered more or less a constant.

System Overview

Aquajolt, the portable hydroelectric generator, would answer all of these problems. Since the residents of this country possess little in the way of what most Westerners would consider large appliances, the power output of such a device would not have to be very large. Even 50 watts would be enough to power the small devices that are common in such areas. Aquajolt will consist of a turbine attached to a floating platform and anchored in a moving body of water. The turbine will convert the kinetic energy of the water into rotational energy which is translated through a gear system to a generator. The generator then supplies power to an on-shore charging station via a waterproof cable.

[1] http://www.iea.org/weo/electricity.asp

The device can be disassembled into at most four parts with each part weighing no more than 25 kg (≈55 lbs) in order for it to retain its portability. The on-shore station will contain a battery that is charged by the generator. The battery will be protected from overcharging through a charge regulation circuit. An indicator will display the remaining potential of the battery. The station is also equipped with an inverter to convert the DC output of the battery to 120VAC, which will then be connected to an outlet. Another indicator will show whether there is sufficient power being supplied to the inverter from it to be run as intended.

Level 1 Block Diagram

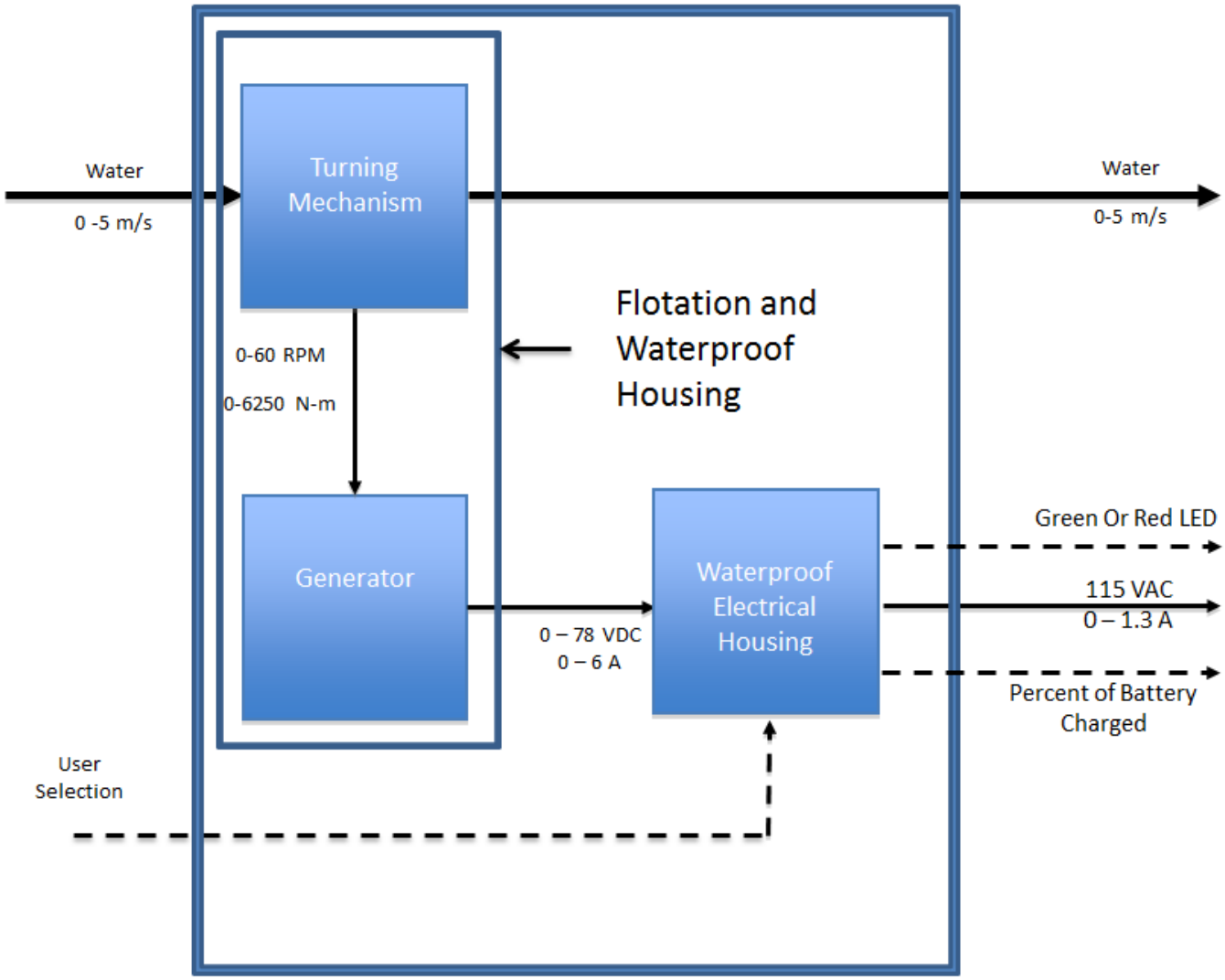

Level 2 Block Diagram

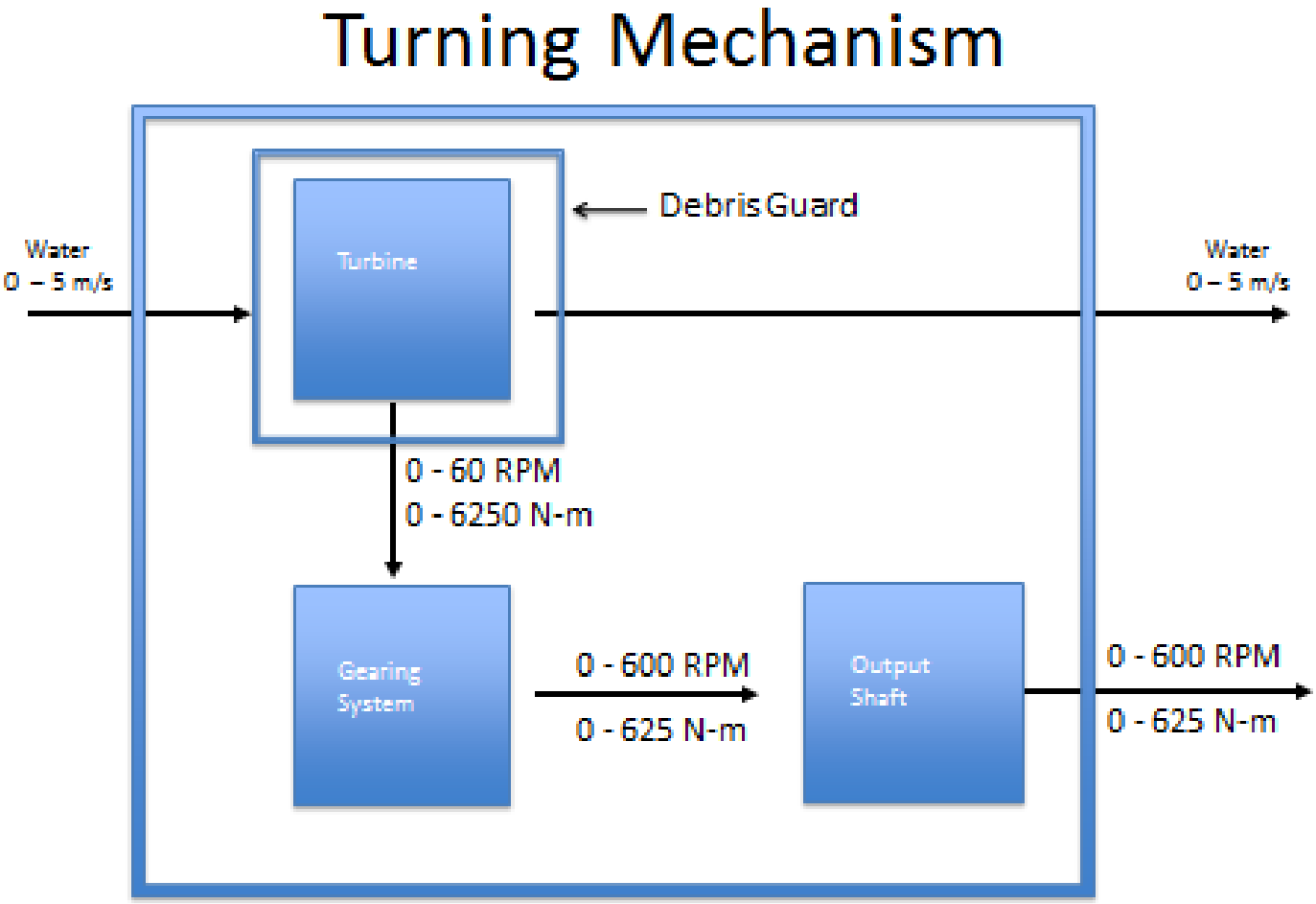

Level 2 Block Diagram

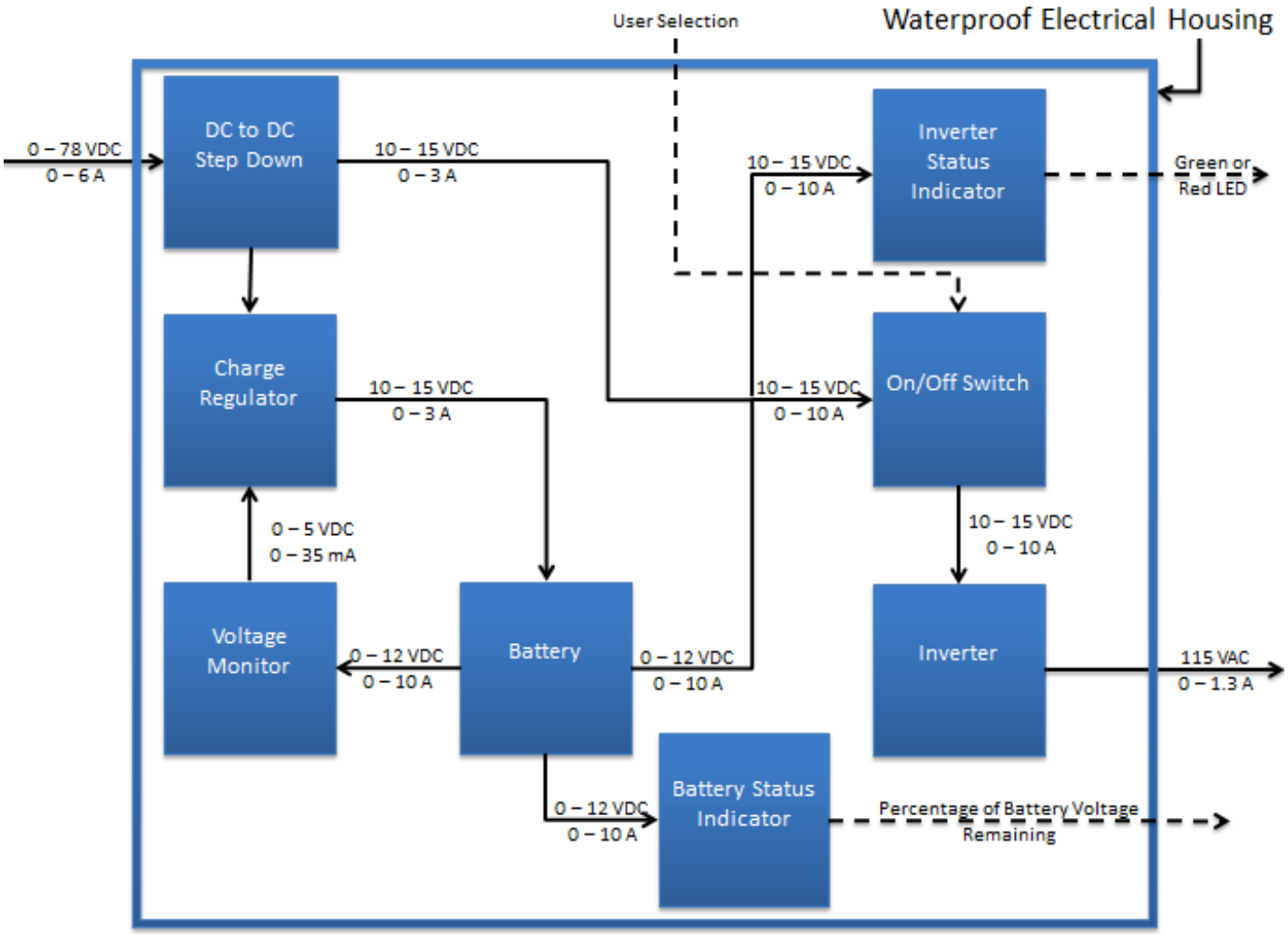

Functional Decomposition of Blocks

Floatation Mechanism: The buoyancy system keeps the turning mechanism at the optimum depth in the water (about 10% below the surface of the moving body of water) in order to take advantage of the maximum flow rate in the river. This is defined as the optimum depth due to the fastest flow of water being found at this point. The buoyancy will be enough to keep at least 100 kg (≈220 lbs) afloat. To create a buoyancy force able to keep much weight afloat, 0.1 m^3 of water must be displaced. This value for the weight of the device is based off of the worst case scenario of the weight specifications listed above. For our flotation mechanism, we anticipate a need for a river depth of at least 0.6 m.

Waterproof Housing: This keeps the sensitive electrical components of the generator safe from the spray of the river.

Debris Guard: This device serves to keep any wildlife or floating material in the water from hampering the movement of the wheel.

Waterproof Electrical Housing: This section houses all of the electrical components of the system (circuits, battery, and inverter). It has a user interface that contains the LED outputs of the Battery Status Indicator and the Inverter Status Indicator, as well as switch that the user can flip to allow power to run to the inverter. It also has a standard AC outlet so that a device can be plugged it. The housing will protect the components from the elements and also keep them safe during normal use and transport. The section will be placed on the shore.

Turning Mechanism: This part of the device will be placed in a moving body of water and will function by converting the kinetic energy of the water into a usable rpm and torque. The RPM and torques are calculated using a wheel diameter of 1 m and a cross –sectional river area of 0.5 m^2 and includes a 60%

efficiency loss from velocity of the water to velocity of the wheel. Sample calculations for torque and RPM can be found in Appendix B.

Input: Water, 0-5 m/s

Output: 0-60 RPM, 0-6250 N-m, water 0-5 m/s

Gear System: The torque and rpm of the turning mechanism will be sent through a system of gears to increase RPM at the cost of torque. We anticipate at least a 10:1 gearing ratio.

Input: 0-60 RPM, 0-6250 N-m

Output: 0-600 RPM, 625 N-m

Output Shaft: The shaft transmits the altered torque and rpm to the generator. The DC power generated is taken from the specifications of the M-12 generator at 600 RPM. The graph used can be found in Appendix B.

Input: 0-600 RPM, 625 N-m

Output: DC power (0-78 V, 0-6 A)

DC to DC Step Down: This section will take the DC power from the generator and drop it down into a range that is acceptable for the battery and the inverter. (The calculations and reasoning behind the values listed below can be found in Appendix B).

Input: DC Power (0-78 V, 0-6A)

Output: DC Power (10-15 V, 0-3 A)

Charge Regulator: This device will prevent the battery from becoming overcharged. It allows power to pass through until the battery is fully charged. Once it is charged, the charge regulator stops the battery from charging. In addition, it also keeps the battery from returning charge to the generator when insufficient torque is applied to the wheel.

Input: DC Power (From DC to DC Step down: 10-15 V, 0-3 A)

DC Power (From Voltage Monitor: 0-5 V, 0-35 mA)

Output: DC Power (10-15 V, 0-3 A)

Voltage Monitor: The voltage monitor checks the voltage on the battery to make sure it does not raise above the specified level for the battery (12 V). If the voltage on the battery is lower than 12 V, it sends a high signal out to the charge regulator to allow the voltage to pass through. Once the voltage on the battery rises above 12 V, the Voltage Monitor sends out a low signal to the Charge Regulator to stop voltage from passing through.

Input: DC Power (0-12 V, 0-10 A)

Output: DC Power (0-5 V, 0-35 mA)

Battery: The battery will store the power produced by the generator.

Input: DC Power (10-15 V, 0-3 A)

` Output: DC power (0-12 V, 0-10 A)

Battery Status Indicator: The charge status indicator will show how much voltage is left on the battery, as a percentage.

Input: DC Power (0-12 V, 0-10 A)

Output: Remaining voltage on the battery, shown in a percentage through a range of LEDs (sample picture shown in Appendix B).

Inverter Status Indicator: The inverter status indicator will determine if the inverter is being supplied sufficient DC voltage to operate (10-15 VDC). It will use comparators to determine if the voltage is within the specified range. If it is, a green LED will turn on. If not, a red LED will turn on. This will let the user know if it is okay to turn on.

Input: DC Power (0-15 V, 0-10 A)

Output: Green or Red LED will be illuminated.

Switch: The switch will allow the user to send select if power is sent to the inverter, according to the output of the inverter status indicator.

Input: DC Power (0-15 V, 0-10 A), User Selection

Output: If in the on position, DC Power (0-15 V, 0-10 A). If in the off position, there is no output.

Inverter: The inverter will take the DC output of the battery and convert it to AC, then send it to the user.

Input: DC Power (10-15 V, 0-10 A)

Output: AC Power (115 V, 0-1.3 A)

Organization and Management

The Aquajolt team consists of two mechanical engineers, Taylor Gammon and Joshua Pilgrim, and two electrical engineers, Mary Samoei and Kendall White. Each team member will contribute equally to any efforts of documentation and brainstorming, along with being responsible for their individual components of the overall design. It is important to note that all members of the team are expected to work with the others to aid them on their own projects as well, in order to ensure that each component of the entire design can be successfully integrated at the end of the design process.

Kendall White: Kendall is the project manager and electrical engineer for the Aquajolt project. He is responsible for the charge regulator and battery selection. Kendall and Mary will work together to design the waterproof on-shore charging station.

Taylor Gammon: Taylor is the mechanical engineer working with Joshua concerning the turbine design and the generator housing design. He is individually responsible for the gear design.

Joshua Pilgrim: Joshua is the mechanical engineer working with Taylor concerning the turbine design and the generator housing design. He is individually responsible for the generator selection.

Mary Samoei: Mary is the electrical engineer responsible for the selection of the inverter and the design of the user interface. Kendall and Mary will work together to design the waterproof on-shore charging station.

Work Breakdown Structure (Fall 2011)

ID	Task Name	Description	Deliverables	Start/stop	Team members
1	Project Selection	Team chooses a project	Main project idea	8/22 - 9/6	ALL
2	Project Launch	The specifications of the project are chosen	Choices of subsystems	9/7 - 9/28	ALL
3	Project Launch Stage-gate	Teacher evaluation	Project launch document	9/24 - 9/24	ALL
4	Design Selection	Choose the overarching design for the project.	Sketches, options, alternatives	9/29 - 10/4	ALL
5	System Design	Main subsystems are chosen.	Finalized sketch	9/29 - 10/13	ALL
6	Preliminary Design Stage-gate	Teacher evaluation	System Design document	10/13 - 10/13	ALL
7	**Detail Design**	Components of subsystems are designed.	Block diagram	10/14 - 12/8	ALL
7.1	Generator Selection	A generator based is chosen based on wattage desired and available torque	Specifications, reasoning, product number	10/14 – 11/2	J
7.2	Turning Mechanism	The turning mechanism's subsystems are designed	Simulations and calculations supporting final design	10/14 – 12/8	T, J
7.21	Turbine Design	The main turbine is designed based on feasibility and torque	Comparison of various turbine designs	10/14 – 11/16	T,J
7.22	Gear Design	The gears are designed based on the desired RPM increase to the generator	Rationale for gearing ratio based on generator torque and RPM input	10/14 – 11/3	T
7.23	Housing Design	The waterproof housing for the generator is designed	Design, CAD drawings	10/14 – 11/24	T, J
7.3	**Power Distribution**	The electrical subsystems are chosen	Block diagram	10/14 – 12/8	M, K
7.31	Battery Selection	A battery is chosen based on expected wattage output and storage needed	Specifications, reasoning product number,	10/14 – 10/27	K
7.32	Charge Regulator	The charge regulator meant to regulate the generator is designed	Multisim schematic	10/14 – 11/18	K
7.33	Power Inverter	The power inverter is chosen	Specification, product number, and specification	10/14 – 11/2	M
7.34	User Interface	A user interface is designed	Multisim schematic	11/3 – 11/22	M
7.35	Waterproof Housing	The on-shore housing is chosen.	CAD drawings,	11/23 – 12/8	K, M
7.36	Battery Life Indicator	The battery life indicator is designed	Multisim schematic	11/3-11/22	K, M

8	Integration Check	The electrical and mechanical subsystems are integrated to check for interference	Finalized design plan	11/23-12/7	
9	Interim Design Stage-gate	Teacher evaluation	Interim Design Document	12/8 – 12/8	ALL

Work Breakdown Structure (Spring 2012)

ID	Task Name	Description	Deliverables	Start/stop	Team members
1	**Parts Assembly/Testing**	The parts for all subsystems are assembled and tested	An initial model to troubleshoot	1/9-3/1	ALL
1.1	Mechanical Systems	The mechanical subsystems are constructed	Working subsystems that meet specifications	1/9 – 3/1	ALL
1.11	Generator Testing	The generator's output for different RPM is tested	Results, interpretations	1/9 – 1/26	J
1.12	Gear and Shaft	The gear and shaft is constructed and the ratio tested	Results, interpretations	1/9 – 2/6	T
1.13	Turbine	The turbine is tested in various flow rates	Results, interpretations	1/14 – 2/22	T, J
1.14	Assembly Housing	The waterproof chamber for the generator is constructed	Working component that meets specifications	2/7 – 3/1	T, J
1.2	Electrical Systems	All electrical subsystems are constructed and tested	Working subsystems that meet specifications	1/9 – 3/1	M, K
1.21	Charge Regulator	The charge regulator is completed and tested	Working component that meets specifications	1/9 – 2/25	K
1.22	Power Inverter	The power inverter is completed and tested	Results, interpretations	1/9 – 1/28	M
1.23	User Interface	The user interface is completed and tested	Results, interpretations	1/30 – 2/22	M
1.24	Battery Testing	The battery is installed and tested	Results, interpretations	1/30 – 2/22	K
1.25	Encasement	The waterproof on-shore charging station is constructed	Working component that meets specifications	1/30 – 2/22	M, K
2	Final Design Stage-gate	Teacher evaluation		3/1 – 3/1	ALL
3	System Integration	The completed subsystems are combined	A completed device to troubleshoot	3/2 – 3/30	ALL
4	System Testing and Modification	Troubleshooting and minor design changes are	A more streamlined design	4/2 – 4/19	ALL

		made			
5	Acceptance Tests Complete	The ABET tests are completed	N/A	4/19 – 4/19	ALL
6	User's Manual	The user's manual is written	Document	4/5 – 4/24	ALL
7	Final Report	The final report is written	Document	3/27 – 4/24	ALL
8	Final Presentation	The presentation of the fully completed, functional device is made	Final presentation, final document	4/26 – 4/26	ALL

Estimated Budget				
Item	**Prospective Vendor**	**Time of Delivery**	**Provider**	**Estimated Cost ($)**
Generator	Presto Wind	1 week	http://www.prestowind.com/page/1maq3/Online_Windmill_Store.html	270
Battery	Amazon	1 week	http://www.amazon.com/gp/product/B002QGVWBW	50
Inverter	The Inverter Store	1 week	http://www.theinverterstore.com/the-inverter-store-product.php?model=pwrinv400w-top-rgb	40
Wire	Allied Wire and Cable		http://www.awcwire.com/Part.aspx?code=657I42H8J13	30
Electrical Outlet	Lowes		http://www.lowes.com/pd_158883-1571-1595-W3PKCC4_?PL=1&productId=3127865	20
Sprockets and Chain	Mcmaster-Carr	2 weeks	http://www.mcmaster.com/#roller-chain-sprockets/=ef5diw	50
Turbine Materials	Various			150
PCB	PCBnet		http://www.pcbnet.com/newcustomeroffer.asp	40
Flotation				130
Miscellaneous				250
Total				**1030**

Fall and Spring Gantt Charts

Fall Project Plan

ID	Task Name	Duration	Start	Finish
1	Project Selection	12 days	Mon 8/22/11	Tue 9/6/11
2	Project Launch	16 days	Wed 9/7/11	Wed 9/28/11
3	Project Launch Stage/Gate	0 days	Sat 9/24/11	Sat 9/24/11
4	Design Selection	4 days	Thu 9/29/11	Tue 10/4/11
5	System Design	11 days	Thu 9/29/11	Thu 10/13/11
6	Preliminary Design Stage/Gate	0 days	Thu 10/13/11	Thu 10/13/11
7	**Detail Design**	**40 days**	**Fri 10/14/11**	**Thu 12/8/11**
8	Generator Selection	14 days	Fri 10/14/11	Wed 11/2/11
9	**Turning Mechanism**	**40 days**	**Fri 10/14/11**	**Thu 12/8/11**
10	Turbine Design	24 days	Fri 10/14/11	Wed 11/16/11
11	Gear Design	15 days	Fri 10/14/11	Thu 11/3/11
12	Housing Design	30 days	Fri 10/14/11	Thu 11/24/11
13	**Power Distribution**	**40 days**	**Fri 10/14/11**	**Thu 12/8/11**
14	Battery Selection	10 days	Fri 10/14/11	Thu 10/27/11
15	Charge Controller	26 days	Fri 10/14/11	Fri 11/18/11
16	Battery Life Indicator	13 days	Fri 10/28/11	Tue 11/15/11
17	Power Inverter	14 days	Fri 10/14/11	Wed 11/2/11
18	User Interface	14 days	Thu 11/3/11	Tue 11/22/11
19	Waterproof Electrical Housing	12 days	Wed 11/23/11	Thu 12/8/11
20	Integration Check	11 days	Tue 11/22/11	Tue 12/6/11
21	Interim Design Stage/Gate	0 days	Thu 12/8/11	Thu 12/8/11
22	Thanksgiving Break	7 days	Sat 11/19/11	Sun 11/27/11

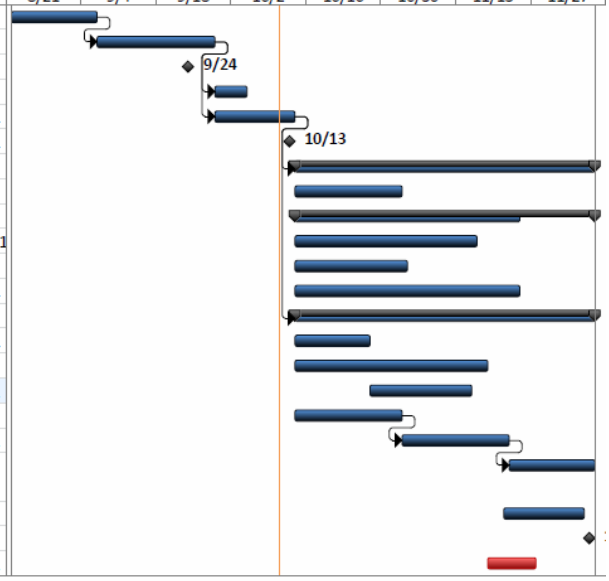

Spring Project Plan

ID	Task Name	Duration	Start	Finish
1	**Parts Assembly/Testing**	**39 days**	**Mon 1/9/12**	**Thu 3/1/12**
2	**Mechanical Systems**	**39 days**	**Mon 1/9/12**	**Thu 3/1/12**
3	Generator Testing	14 days	Mon 1/9/12	Thu 1/26/12
4	Gear and Shaft	21 days	Mon 1/9/12	Mon 2/6/12
5	Turbine	29 days	Sat 1/14/12	Wed 2/22/12
6	Assembly Housing	18 days	Tue 2/7/12	Thu 3/1/12
7	**Electrical Systems**	**39 days**	**Mon 1/9/12**	**Thu 3/1/12**
8	Charge Controller	35 days	Mon 1/9/12	Fri 2/24/12
9	Power Inverter	16 days	Mon 1/9/12	Sat 1/28/12
10	User Interface	18 days	Mon 1/30/12	Wed 2/22/12
11	Battery Testing	18 days	Mon 1/30/12	Wed 2/22/12
12	Encasement	18 days	Mon 1/30/12	Wed 2/22/12
13	Final Design Stage/Gate	0 days	Thu 3/1/12	Thu 3/1/12
14	System Integration	21 days	Fri 3/2/12	Fri 3/30/12
15	System Testing & Modification	14 days	Mon 4/2/12	Thu 4/19/12
16	Acceptance Tests Complete	0 days	Thu 4/19/12	Thu 4/19/12
17	User's Manual	14 days	Thu 4/5/12	Tue 4/24/12
18	Final Report	21 days	Tue 3/27/12	Tue 4/24/12
19	Final Presentation	0 days	Thu 4/26/12	Thu 4/26/12
20	Spring Break	7 days	Sat 3/3/12	Sun 3/11/12
21	Engineering Showcase	0 days	Sun 4/29/12	Sun 4/29/12
22				

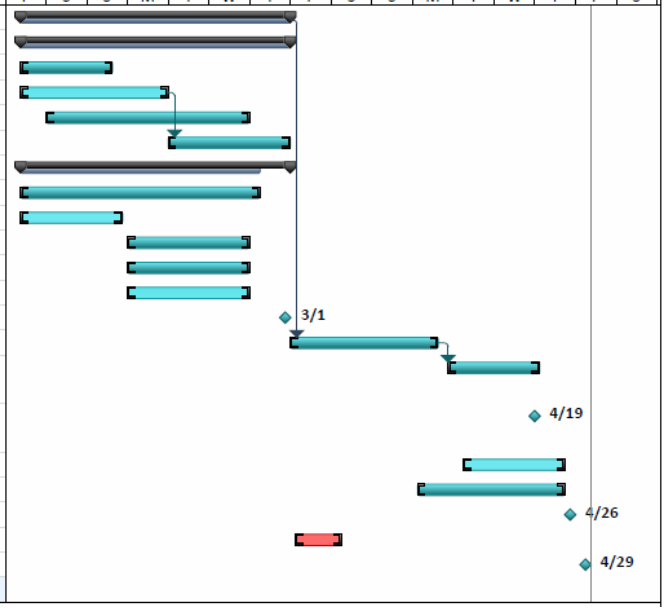

Network Diagrams

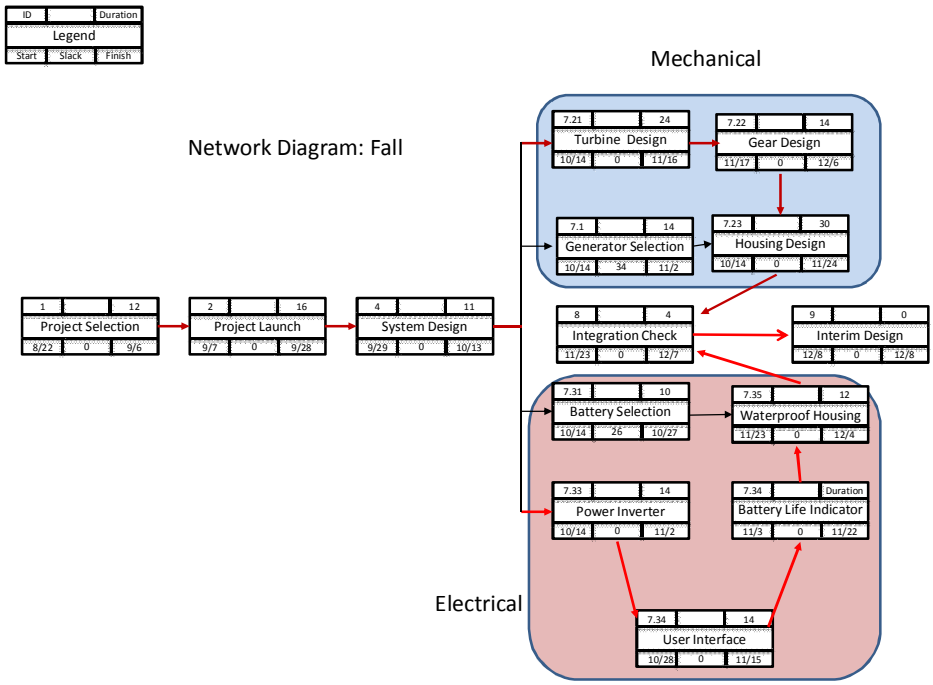

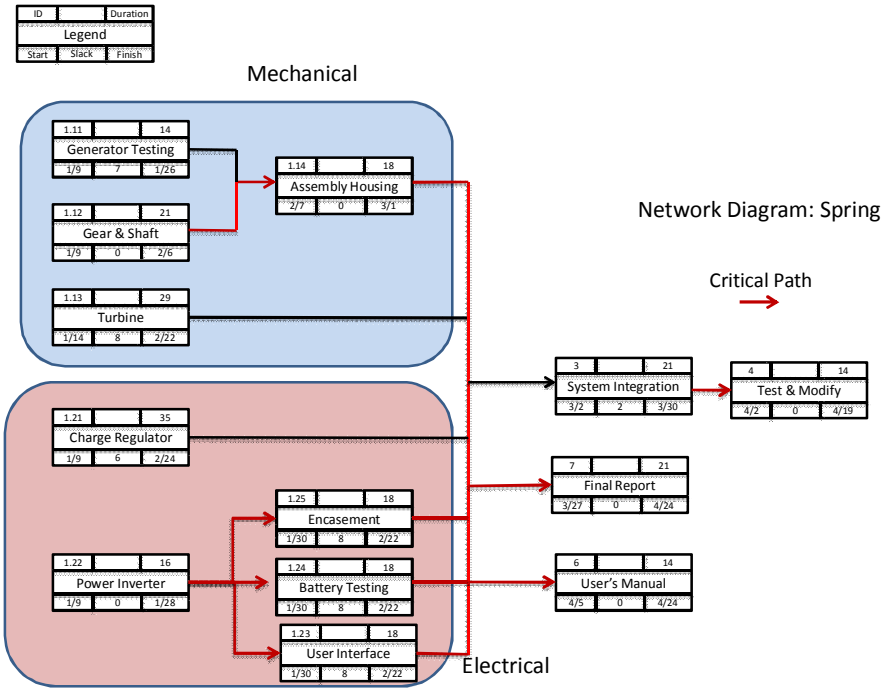

Appendix A: Requirement Specifications

Portable Hydroelectric Generator

Taylor Gammon, Joshua Pilgrim, Mary Samoei, Kendall White

Overview

In today's world, electricity is a vital resource that it utilized in almost every nation. Electricity powers devices that many people cannot seem to live without, such as computers, cell phones, lights, refrigerators, and countless other products that define life in the twenty-first century. Electrical power generation has historically depended heavily on the consumption of fossil fuels. However, this dependence on fossil fuels has created a false carrying capacity for the globe, allowing humans to enjoy a higher standard of living than the earth can sustainably provide. Fossil fuels are a limited resource, and we consume them at a faster rate than the world can produce them.

As fossil fuels continue to increase in price and decrease in availability, sources of alternate energy are becoming critical for supplying all our energy needs. Humanity has tried to harness the sun, the wind, even the movement of the tides in order to capitalize on nature's perpetual sources of energy. These alternative energy generation methods are based on renewable energy sources and have significantly less negative environmental impact than fossil fuels. One common form of energy that has been harnessed since the Hellenistic period is the force of a flowing body of water. Unlike solar or wind generation methods, which depend heavily on ideal weather conditions, hydroelectric generation depends on a reliably consistent source of renewable energy. Hydroelectricity is an environmentally friendly, perpetual source of energy that has less risk than fossil fuel or nuclear power generation.

Many developing nations do not have the capability of generating power on a large enough scale to deliver a constant source of electricity to each home. Most homes in those nations are not

connected to an electrical grid like we are accustomed to in the United States. However, people in this part of the world still own small electrical appliances, such as cell phones and radios. With the increasing technological advancements in the cell phone industry, phones are capable of connecting these people to the rest of the world in a way that was previously impossible. However, it is difficult for them to find places to charge these devices consistently. A device that could generate enough electrical energy to power these small devices would be extremely useful.

Our portable hydroelectric generator seeks to address some of the electrical generation deficiencies faced by many people in developing nations across the world. The device will utilize hydroelectric generation methods to power small personal appliances, such as cell phones and radios. The device would be placed in a moving body of water and be able to safely generate electricity that can be sent directly to the appliance or to a battery for later use. The AquaJolt portable hydroelectric generator will allow people with limited resources to power electronic appliances that connect them to the rest of the world in ways that were previously impossible.

Mission Statement

The goal of this project is to design a hydroelectric generator for small scale applications, using information from existing designs for large scale use. This small-scale generator will provide a constant source of electricity in places or situations where reliable power sources are scarce. A portable hydroelectric generator could be used in developing countries in order to supply individuals there with a reliable source of electricity. Using gasoline powered generators in these settings can be a difficult proposition, due to the lack of steady supply lines needed to constantly fuel them. This product will also provide energy at a much lower cost than fossil fuel generators. The apparatus is intended to be a temporary source of power, and the portability of the device allows users to transport it easily from one location to another.

Deliverables

1. *Portable hydroelectric generator*

2. System Specifications

3. Test results

4. User Manual

5. Final Report

Operation

The portable hydroelectric generator will be placed in a moving body of water and secured so that it does not float away. Once installed, the device will convert the kinetic energy of the moving water into usable electrical energy through a generator. The user will be able to choose whether the energy will be sent directly through an inverter to the appliance to be charged, or if the energy will be stored in a battery to be used at a later time. If the user wants to charge an appliance directly, the power will be inverted and sent to a standard AC (120 VAC, 60Hz) outlet where a single appliance may be plugged in. The power generation will be monitored to verify the state of the output energy.

Customer Needs

1. Lightweight
2. Packable and portable
3. Easy to install
4. Low noise level
5. Appears finished
6. Powers multiple appliances
7. No risk to user or environment

8. Low maintenance
9. Durable

Technical Specifications

1. Power output for multiple appliances - supplies, at a minimum, 50W at 120VAC to a standard outlet.
2. Lightweight- Less than 25 kg, or can be easily separated into at most four pieces that are less than 25 kg each.
3. Portable – Fits through all standard doorways.
4. Easy to install - Capable of being installed within one hour by a single person after reading the user manual.
5. Appears Finished - No dangerously exposed moving parts or wires.
6. Durable - Able to withstand transport.
7. Low Noise Level - Produces less than 100 dB when operating from a distance of two meters.
8. Very low maintenance – Does not require adjustment or handling in a 6 hour period.
9. No Risk to User or Environment - Electrical components are water proofed/shielded, there are no sharp edges exposed, does not harm wildlife, and contains no toxic materials.
10. Functions in most rivers - Requires a water velocity of at least 0.5 m/s and a minimum depth of 0.6 m.

Needs Metrics Matrix

	Can be disassembled into parts that weigh no more than 25kg each.	Capable of being installed by a single person after reading the user manual within one hour.	Requires no special training.	The product will possess handles or straps on unwieldy sections.	The product will produce less than 100 dB of sound while operating.	No exposed moving parts or exposed wires.	Generates at least 50W of power.	No sharp corners, all electrical components waterproofed.	Does not require constant supervision.	Mechanism is protected.	Can survive frequent transportation and installation.
Light	X										
Packable		X		X							
Easy to install			X								
Low noise level					X						
Appears finished						X					
Powers multiple appliances							X				
No risk to user or environment								X			
Low maintenance									X	X	
Durable											X

Testing Plans

1. The assembly will be weighed using a bathroom scale. A person will first be weighed and their weight recorded. The person will then hold the assembly and step on the scale. The weighed will be recorded. The difference will then be calculated and converted to a mass. The assembly's dimensions will also be measured with a tape-measure and compared to the dimensions of a standard door frame. This test will ensure that the generator retains its portability.

2. The generator should be able to produce an average of 50 watts over a 6 hour period given a flow rate of at least 0.5 m/s.

3. The assembly should be able to be built in less than one hour by an individual after reading the user manual. This test will be performed by four users, and the mean time of the installation will be calculated. A mean time of less than one hour will be considered a success.

4. The generator will be loaded into a pickup truck and transported at least 15 km on dirt roads. If it still functions properly, then it passes the test of durability.

Implementation Considerations

The apparatus surrounding the generator must be built out of affordable materials that are readily available. The target market of this device is for people in very remote areas with limited resources to expensive manufacturing processes. Lightweight materials such as wood, aluminum, and plastics are all plausible options for constructing the device. The generator itself must be purchased separately, not constructed by the product developers of this device. The construction should not require highly advanced manufacturing skills in order to assemble.

Appendix B: Sample Calculations and Generator Specifications

RPM

We assume a wheel diameter of 1 m and a flow rate of 5 m/s. RPM can be found as follows.

$$\square\square\square = \frac{\square\ \square 60}{\square\square}$$

$$\square\square\square = \frac{5\ \frac{\square}{\square}\ \square 60}{1\ \square\ \square\square}$$

$$\square\square\square = 96$$

Since Poncelet blades produce an efficiency of approximately 60%, this number is further reduced.

$$\square\square\square = 96\ \square 0.6$$

$$\square\square\square = 60$$

Torque

Torque is calculated based on an assumed radius of 0.5 m and a cross-sectional area of 0.5 m^2. It is found by the following formula:

$$\square = \square\square(\square\ \square\square\ \square\square^{\square})$$

$$\square = 0.5\ \square\ \square\square 1000\ \frac{\square\square}{\square^{\square}}\ \square 0.5\ \square^{\square}\ \square\square 5\ \frac{\square}{\square}\square^{\square}\ \square$$

$$\square = 6250\ \square - \square$$

Gear Ratio

Transmitted torque and RPM through a gear set is governed by the gear ratio. Shown below are the calculations involved in finding the output torque and RPM through a 10:1 gear ratio given an input torque of 6250 N-m at 60 RPM.

$$\tau_2 = \tau_1 \cdot \frac{N_2}{N_1}$$

$$RPM_2 = RPM_1 \cdot \left(\frac{N_1}{N_2}\right)^{\eta}$$

In this formula, the variable N refers to the number of teeth on the first gear in the set. As this is a 10:1 ratio set, $\frac{N_2}{N_1}$ will always equal 0.1. So, the calculations continue.

$$\tau_2 = 6250 \cdot - \cdot 0.1$$

$$\tau_2 = 625 \cdot - \cdot$$

$$RPM_2 = 60 \cdot 0.1^{\eta}$$

$$RPM_2 = 600$$

DC To DC Step Down

The input power range was determined as shown above. The output needs to between 10 and 15 V because this is being sent to the battery and to the inverter. Since these both are 12 V systems, they need the voltage to be in this range. This was found by examining many batteries and inverters specifications online. The output current (0-3 A) was determined based on the output of a buck boost

converter we have considered using. The LM5118 Wide Range Buck-Boost Controller[2] is appealing to us because it allows for a very wide range of voltage inputs, which fits with the outputs of the generators we are considering. The maximum output current of this controller, as found in the data sheet is 3 A.

Voltage Monitor

The output power range for the voltage monitor was determined based on the output of a voltage monitor IC we are considering using. The MAX8212 Voltage Monitor[3] can be used to detect voltage levels. The output levels specified from the data sheet were a 35 mA output at 5 V.

Battery

We chose a 12 V battery because this meets the requirements of standard DC to AC inverters. We chose a 10 A current for the battery because this will meet the 50 W requirement set forth in the technical specifications.

$$P = V I$$

$$P = 12 \cdot 10$$

$$P = 120 \text{ Watts}$$

This power level was chosen so that it would not only meet our minimum power requirements but also could handle a higher power level in the event that we generate more power.

[2] http://www.national.com/ds/LM/LM5118.pdf
[3] http://datasheets.maxim-ic.com/en/ds/MAX8211-MAX8212.pdf

Inverter

The values for the output of the inverter were based upon the maximum inputs that we expect the inverter to receive. The output voltage was chosen to be 115 VAC because this is the average of standard output range (110-120 VAC). Since these are basic calculation, a 100% efficiency was assumed.

$$P_{out} = P_{in} \cdot \eta_{inv}$$

$$P_{out} = 15 \cdot 10$$

$$P_{out} = 150 \text{ Watts}$$

$$P_{out} = P_{in}$$

$$P_{out} = P_{in} \cdot \eta_{inv}$$

$$150 = 115 \cdot I_{out}$$

$$I_{out} = \frac{150}{115}$$

$$I_{out} = 1.3 \text{ A}$$

Generator Output

The output of the generator was based on the following chart provided by the producers of the M-12 Light Wind Generator.

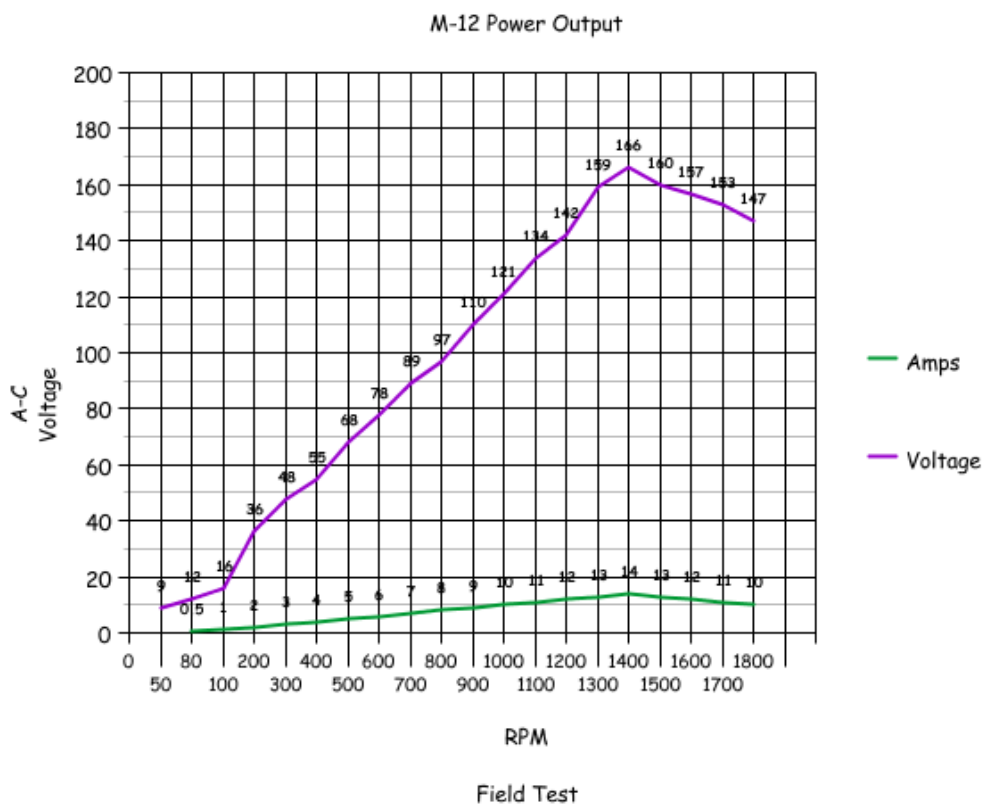

Fig. 1 Manufacturer's Specifications For M-12 Generator

As the chart shows, at an RPM of 600, the unloaded generator produces 6 A and 78 V.

Battery Status Indicator

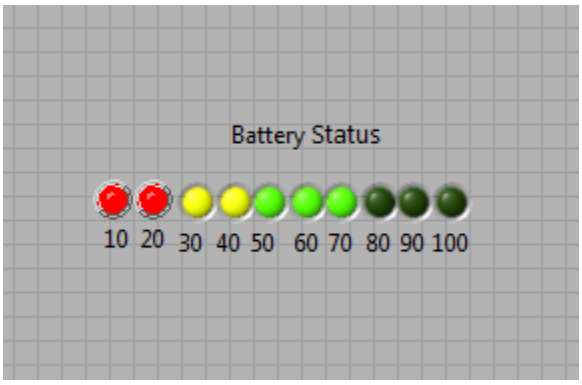

Fig. 2 Sample Display of the Battery Status Indicator

The battery status indicator displays how much percent of the battery's voltage is left on the battery. If the voltage remaining is between 10% and 20%, the first LED is illuminated. If it then goes above 20% but is less than 30%, the 10% and 20% LEDs are illuminated and so on and so forth.